DS 200

Electronic Pressure Switch

Stainless Steel Sensor

accuracy according to IEC 60770:
standard: 0.35 % FSO
option: 0.25 % FSO

Nominal pressure

from 0 ... 100 mbar up to 0 ... 600 bar

Contacts

1, 2 or 4 independent PNP contacts,
freely configurable

Analogue output

2-wire: 4 ... 20 mA
3-wire: 4 … 20 mA / 0 … 10 V
others on request

Special characteristics

- indication of measured values on a 4-digit LED display
- rotatable and configurable display module

Optional versions

- **IS-version**
  Ex ia = intrinsically safe for gases
- pressure sensor welded
- customer specific versions

The electronic pressure switch DS 200 is the successful combination of

- intelligent pressure switch
- digital display

and has been specially designed for numerous applications in various industrial sectors.

As standard the DS 200 offers a PNP contact and a rotatable display module with 4-digit LED display. Optional versions like e.g. an intrinsically safe version, max. four contacts and an analogue output complete the profile.

Preferred areas of use are

- Plant and machine engineering
- Heating and air conditioning
- Environmental engineering (water – sewage – recycling)

BD SENSORS GmbH
BD-Sensors-Straße 1
D - 95199 Thierstein

Tel.: +49 (0) 92 35 / 98 11- 0
Fax: +49 (0) 92 35 / 98 11- 11

www.bdsensors.de
info@bdsensors.de

Input pressure range											
Nominal pressure gauge[1]	[bar]	-1…0	0.10	0.16	0.25	0.40	0.60	1	1.6	2.5	4	6
Nominal pressure absolute	[bar]	-	-	-	-	0.40	0.60	1	1.6	2.5	4	6
Level gauge [1]	[mH_2O]	-	1	1.6	2.5	4	6	10	16	25	40	60
Overpressure	[bar]	5	0.5	1	1	2	5	5	10	10	20	40
Burst pressure ≥	[bar]	7.5	1.5	1.5	1.5	3	7.5	7.5	15	15	25	50

Nominal pressure gauge [1] / abs.	[bar]	10	16	25	40	60	100	160	250	400	600
Level gauge [1]	[mH_2O]	100	160	250	400	600	-	-	-	-	-
Overpressure	[bar]	40	80	80	105	210	210	600	1000	1000	1000
Burst pressure ≥	[bar]	50	120	120	210	420	420	1000	1250	1250	1250
Vacuum resistance		p_N ≥ 1 bar: unlimited vacuum resistance; p_N < 1 bar: on request									

[1] from 60 bar: measurement starts with ambient pressure

Contact [2]	
Standard	1 PNP contact
Options	2 independent PNP contacts 4 independent PNP contacts (possible with M12x1, 8-pin for 4 ... 20 mA/3-wire; 0 ... 10 V/3-wire on request)
Max. switching current	4 ... 20 mA / 2- and 3-wire: contact rating 125 mA, short-circuit resistant; $V_{switch} = V_S - 2V$ 0 ... 10 V / 3-wire: contact rating 125 mA, short-circuit resistant
Accuracy of contacts [3]	standard: p_N < 0.4 bar: ≤ ± 0.5 % FSO; p_N ≥ 0.4 bar: ≤ ± 0.35 % FSO option: p_N ≥ 0.4 bar: ≤ ± 0.25 % FSO
Repeatability	≤ ± 0.1 % FSO
Switching frequency	max. 10 Hz
Switching cycles	> 100 x 10^6
Delay time	0 ... 100 sec

[2] max. 1 contact for 2-wire current signal with plug ISO 4400 as well as 2-wire current signal with IS-protection
no contact possible with 3-wire in combination with plug ISO 4400

Analogue output (optionally) / Supply	
2-wire current signal	4 ... 20 mA / V_S = 13 ... 36 V_{DC} permissible load: $R_{max} = [(V_S - V_{S\,min}) / 0.02\ A]\ \Omega$ response time: < 10 msec
2-wire current signal with IS-protection	4 ... 20 mA / V_S = 15 ... 28 V_{DC} permissible load: $R_{max} = [(V_S - V_{S\,min}) / 0.02\ A]\ \Omega$ response time: < 10 msec
3-wire current signal	4 ... 20 mA / V_S = 19 ... 30 V_{DC} adjustable (turn-down of span 1:5) [4] permissible load: R_{max} = 500 Ω response time: < 3 sec
3-wire voltage signal	0 … 10 V / V_S = 15 ... 36 V_{DC} permissible load: R_{min} = 10 kΩ response time: < 3 msec
without analogue output	V_S = 15 ... 36 V_{DC}
Accuracy [3]	standard: p_N < 0.4 bar: ≤ ± 0.5 % FSO; p_N ≥ 0.4 bar: ≤ ± 0.35 %FSO option: p_N ≥ 0.4 bar: ≤ ± 0.25 % FSO

[3] accuracy according to IEC 60770 – limit point adjustment (non-linearity, hysteresis, repeatability)
[4] with turn-down of span the analogue signal is adjusted automatically to the new measuring range

Thermal effects (offset and span)				
Nominal pressure p_N	[bar]	-1 … 0	< 0.40	≥ 0.40
Tolerance band	[% FSO]	≤ ± 0.75	≤ ± 1	≤ ± 0.75
in compensated range	[°C]	-20 ... 85	0 ... 70	-20 … 85

Permissible temperatures	
Medium	-40 ... 125 °C
Electronics / environment	-40 ... 85 °C
Storage	-40 ... 100 °C

Electrical protection	
Short-circuit protection	permanent
Reverse polarity protection	no damage, but also no function
Electromagnetic compatibility	emission and immunity according to EN 61326

Mechanical stability		
Vibration	10 g RMS (25 ... 2000 Hz)	according to DIN EN 60068-2-6
Shock	500 g / 1 msec	according to DIN EN 60068-2-27

Materials			
Pressure port	stainless steel 1.4404 (316 L)		
Housing	stainless steel 1.4404 (316 L)		
Display housing	PA 6.6, polycarbonate		
Seals (media wetted)	standard: FKM	option: welded version [5]	others on request
Diaphragm	stainless steel 1.4435 (316 L)		
Media wetted parts	pressure port, seals, diaphragm		

[5] welded version only for pressure ports according to EN 837 and NPT; possible for nominal pressure ranges p_N ≤ 40 bar

Explosion protection (only for 4 … 20 mA / 2-wire)	
Approval AX14-DS 200	IBExU 06 ATEX 1050 X zone 1: II 2G Ex ia IIC T4 Gb (connector) / II 2G Ex ia IIB T4 Gb (cable)
Safety technical maximum values	U_i = 28 V, I_i = 93 mA, P_i = 660 mW, C ≈ 0 nF, L_i ≈ 0 µH
Max. switching current [6]	70 mA
Permissible temperatures for environment	-25 ... 70 °C
Connecting cables (by factory)	cable capacitance: signal line/shield also signal line/signal line: 100 pF/m cable inductance: signal line/shield also signal line/signal line: 1 µH/m

[6] the real switching current in the application depends on the power supply unit

Miscellaneous	
Display	4-digit, red 7-segment-LED display digit height 7 mm range of indication -1999 ... +9999 accuracy 0.1 % ± 1 digit digital damping 0.3 … 30 sec (programmable); measured value update 0.0 … 10 sec (programmable)
Current consumption (without contacts)	2-wire signal output current: max. 25 mA 3-wire signal output current: approx. 45 mA + signal current 3-wire signal output voltage: approx. 45 mA
Ingress protection	IP 65
Installation position	any [7]
Weight	min. 160 g (depending on mechanical connection)
Operational life	100 million load cycles
CE-conformity	EMC Directive: 2014/30/EU Pressure Equipment Directive: 2014/68/EU (module A) [8]
ATEX Directive	2014/34/EU

[7] Pressure switches are calibrated in a vertical position with the pressure connection down. If this position is changed on installation there can be slight deviation in the zero point for pressure ranges p_N ≤ 1 bar.
[8] This directive is only valid for devices with maximum permissible overpressure > 200 bar

Wiring diagrams

2-wire-system (current)

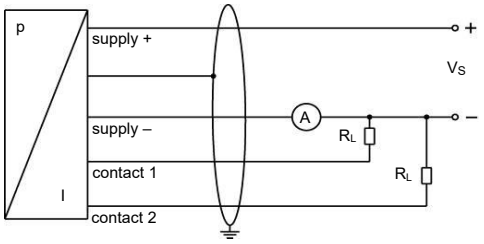

3-wire-system (current/voltage)

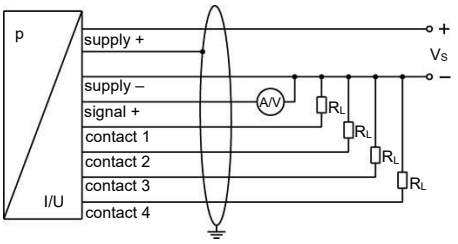

Pin configuration

Electrical connection	M12x1 plastic (5-pin)	M12x1 metal (5-pin)	M12x1 plastic (8-pin)	ISO 4400	Binder series 723 (5-pin)	cable colours (IEC 60757)
		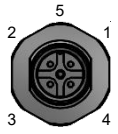			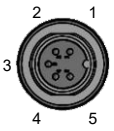	
Supply +	1	1	1	1	1	WH (white)
Supply –	3	3	3	2	3	BN (brown)
Signal + (only 3-wire)	2	2	2	3	2	GN (green)
Contact 1	4	4	4	3	4	GY (grey)
Contact 2	5	5	5	-	5	PK (pink)
Contact 3	-	-	6	-	-	-
Contact 4	-	-	7	-	-	-
Shield	via pressure port	plug housing/ pressure port	via pressure port	ground contact ⏚	plug housing/ pressure port	GNYE (green-yellow)

Electrical connections (dimensions mm / in)

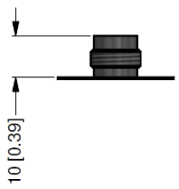

M12x1 plastic
(5-pin)

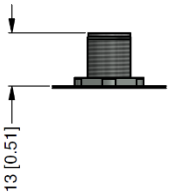

M12x1 metal
(5-pin)

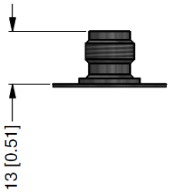

M12x1 plastic
(8-pin)

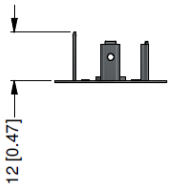

ISO 4400

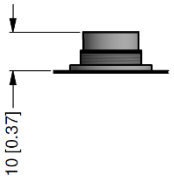

Binder series 723
(5-pin)

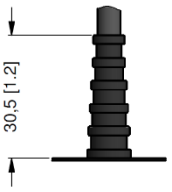

cable outlet [9]

[9] *different cable types and lengths available; permissible temperature depends on kind of cable; standard: 2 m PVC cable (without ventilation tube, permissible temperature: -5 ... 70 °C)*

Dimensions (mm / in)

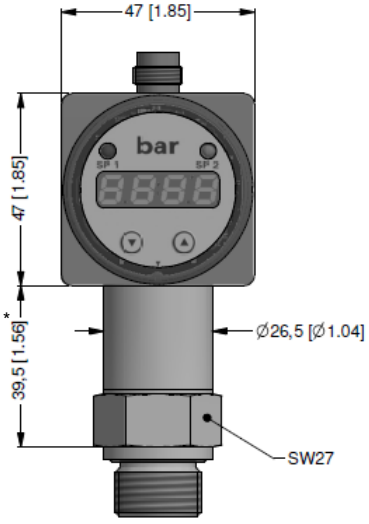

rotatability of display module

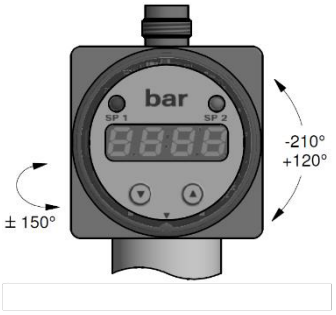

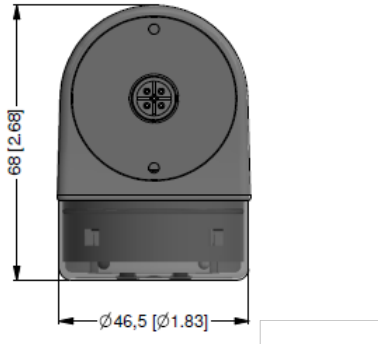

* for nominal pressure p_N > 400 bar increases the length of device by 19 mm (without explosion protection) or by 39 mm (with explosion protection)

Mechanical connection (**dimensions mm / in**)

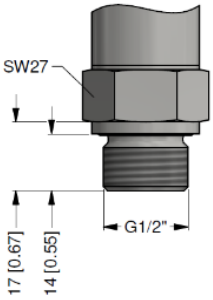

G1/2" DIN 3852

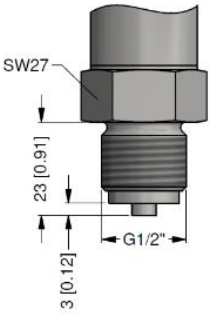

G1/2" EN 837

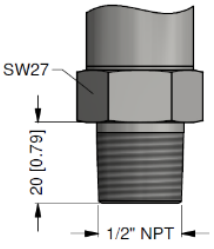

1/2" NPT

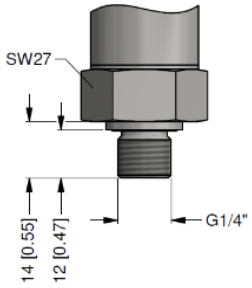

G1/4" DIN 3852

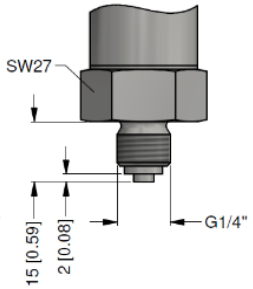

G1/4" EN 837

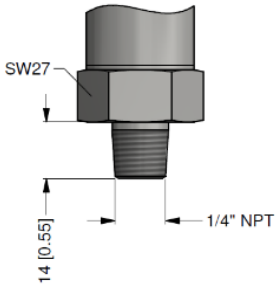

1/4" NPT

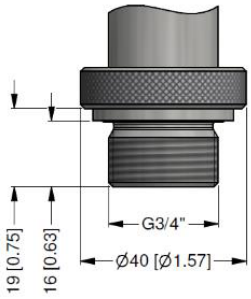

G3/4" flush DIN 3852
(0.1 bar ≤ p_N ≤ 40 bar)

length of device: 87.5 mm (without plug)

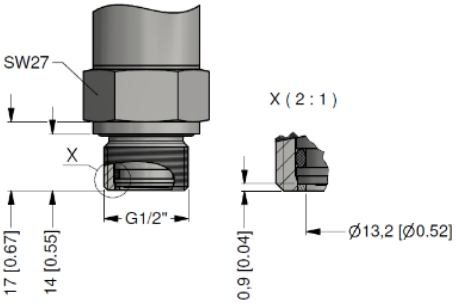

G1/2" flush DIN 3852
(0.1 bar ≤ p_N ≤ 40 bar)

length of device: 103 mm (without plug)

⇨ **metric threads and other versions on request**

© 2023 BD|SENSORS GmbH – The specifications given in this document represent the state of engineering at the time of publishing. We reserve the right to make modifications to the specifications and materials.

Tel.: +49 (0) 92 35 / 98 11- 0
Fax: +49 (0) 92 35 / 98 11- 11
www.bdsensors.de
info@bdsensors.de

BD|SENSORS
pressure measurement

Ordering code DS 200

DS 200 □□□-□□□□-□-□-□-□□□-□□□-□-□□□

Pressure			
gauge in bar [1]	780		
gauge in mH_2O [1]	78H		
absolute in bar [2]	781		
Input	**[mH_2O]**	**[bar]**	
1.0	0.10 [2]	1000	
1.6	0.16 [2]	1600	
2.5	0.25 [2]	2500	
4.0	0.40	4000	
6.0	0.60	6000	
10	1.0	1001	
16	1.6	1601	
25	2.5	2501	
40	4.0	4001	
60	6.0	6001	
100	10	1002	
160	16	1602	
250	25	2502	
400	40	4002	
600	60	6002	
	100	1003	
	160	1603	
	250	2503	
	400	4003	
	600	6003	
	-1 … 0	X102	
	customer	9999	consult
Analogue output			
without			0
4 … 20 mA / 2-wire			1
0 … 10 V / 3-wire			3
4 … 20 mA / 3-wire, adjustable			7J
intrinsic safety 4 … 20 mA / 2-wire [3]			E
customer			9 consult
Contact			
1 contact [3, 4]			1
2 contacts [3, 4]			2
4 contacts [5]			4 consult
Accuracy			
standard for p_N > 0.4 bar:	0.35 % FSO		3
standard for p_N ≤ 0.4 bar:	0.50 % FSO		5
option for p_N ≥ 0.4 bar:	0.25 % FSO		2
customer			9 consult
Electrical connection			
male plug M12x1 (5-pin) / plastic version			N01
male plug M12x1 (8-pin) / plastic version [5]			M50
male plug M12x1 (5-pin) / metal version			N11
male and female plug ISO 4400 [4]			100
male plug Binder series 723 (5-pin)			204
cable outlet with PVC cable [6]			TA0
customer			999 consult
Mechanical connection			
G1/2" DIN 3852			100
G1/2" EN 837			200
G1/4" DIN 3852			300
G1/4" EN 837			400
G1/2" DIN 3852 with flush sensor [7]			F00
G3/4" DIN 3852 with flush sensor [7]			K00
1/2" NPT			N00
1/4" NPT			N40
customer			999 consult
Seal			
FKM			1
without (welded version) [8]			2
customer			9 consult
Special version			
standard			000
customer			999 consult

[1] from 60 bar: measurement starts with ambient pressure
[2] absolute pressure possible from 0.4 bar
[3] with IS version max. 1 contact is possible
[4] with connector ISO 4400 and output 2-wire version only max. 1 contact possible; with 3-wire version no contact possible
[5] 4 contacts and M12x1, 8-pin only possible in combination and together with 4 ... 20 mA/3-wire; 0 ... 10 V/3-wire on request
[6] standard: 2 m PVC cable without ventilation tube (permissible temperature: -5 ... 70 °C); others on request
[7] not possible for nominal pressure p_N > 40 bar; for G3/4" flush nominal pressure abs. on request
[8] welded version only with pressure ports according to EN 837 and NPT; possible for nominal pressure ranges p_N ≤ 40 bar

01.02.2023

© 2023 BD|SENSORS GmbH - The specifications given in this document represent the state of engineering at the time of publishing. We reserve the right to make modifications to the specifications and materials.

BD|SENSORS GmbH
BD-Sensors-Straße 1
D - 95199 Thierstein
Tel.: +49 (0) 92 35 / 98 11- 0
Fax: +49 (0) 92 35 / 98 11- 11
www.bdsensors.de
info@bdsensors.de